SGM-14KA
Shotgun Microphone

SGM-14KA is identical with SGM-14 except it has battery powered feature besides phantom power. This kit comes with a shoe mount suspension to isolate the touch noise. Two cables are included for both professional video camera and DSLR. A windscreen is also included in the pack.

Specifications

Type	Electret Condenser
Polar pattern	Hypercardioid
Frequency Response	40 to 20,000Hz
Sensitivity(at 1,000Hz)	-34±3 dB*(20mV) *0dB=1V/Pa
(Phantom / Battery)	-35±3 dB*(17.8mV)*0dB=1V/Pa
Attenuation Switch	-10 dB
Low Frequency Roll-off	120Hz
Impedance(Phantom /Battery)	Rated impedance is 500Ω / 600Ω
Max. SPL for 1%THD	125dB/110dB
(Phantom / Battery)	
Signal To Noise Ratio	70dB
Power Supply(Phantom/Battery)	9~48VDC /1.5V AA UM3 R6
Current consumption	≦2mA/ 0.4mA (1200 hours typical)
(Phantom / Battery)	
Output Connector	3P XLR (M)
Length	405.6mm

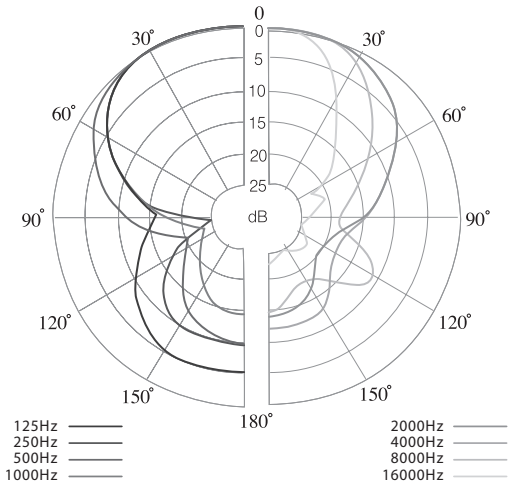

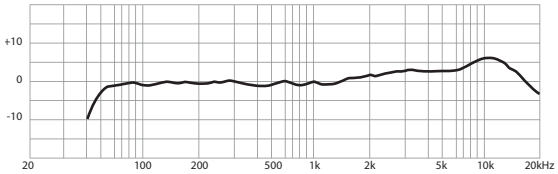

Accessories (For SGM-14KA Only)

KAC-50FM
Cable

This cable is terminated with XLR Male and XLR Female connecters at each end. It is designed for professional video camera.

SMA-14
Shoe Mount Holder

This shoe mount holder isolates shock and vibration from operation effective.

MS-14FUR (Option)
Windscreen

Microphone windscreen made of fur. It is designed to isolate wind noise especially for outdoor use.

KAC-50PM
Cable

This cable is terminated with 3.5mm dummy stereo plug and XLR Female connecter at each end. It is for DSLR and home camcorder.

MS-14
Windscreen

Microphone windscreen designed for SGM-14 shotgun microphone. It effectively minimizes wind and pop noise.

Dimension (mm)

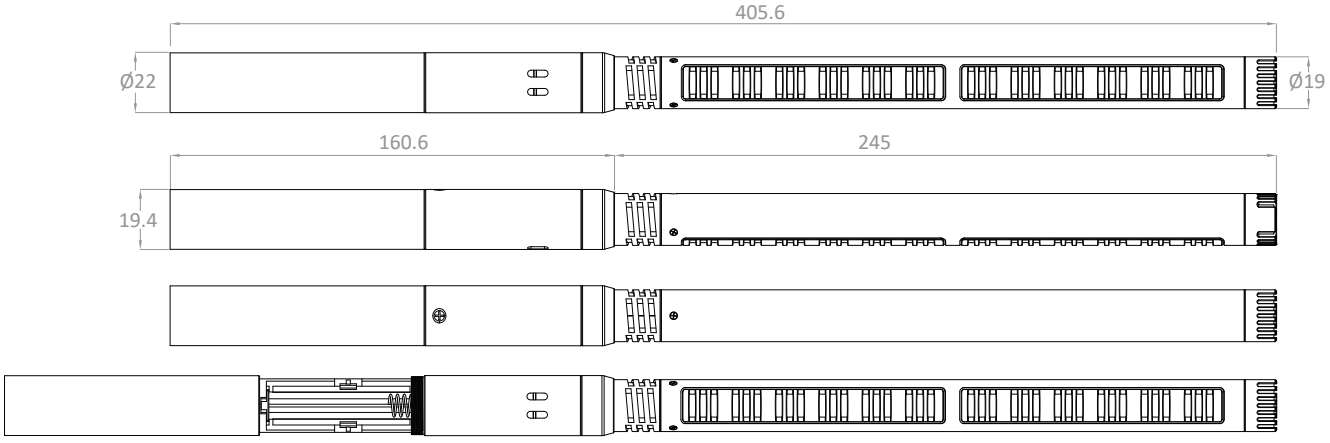

SGM-14
Shotgun Microphone

This 14” shotgun microphone is designed for ENG, outdoor recording and other specialized uses.
It provides narrow acceptance angle and is desirable for long distance sound pick up.
Low cut and pad are available for best miking effect.

Specifications

Type	Electret Condenser
Polar Pattern	Hypercardioid
Frequency Response	20~20,000Hz
Sensitivity	-32±3 dB*(25mV)*0dB=1V/Pa
Attenuation Switch	-10 dB
Low Frequency Roll-off	80 Hz
Impedance	Rated impedance is 200Ω
Max. SPL for 1% THD	125dB (135dB with -10 dB Attenuation)
Signal To Noise Ratio	78dB
Power Supply	9~48VDC phantom power
Output Connector	3P XLR (M)
Length	360mm

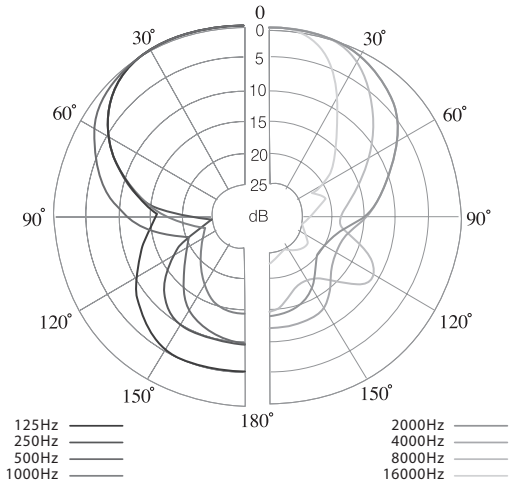

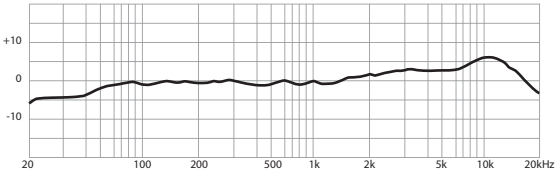

Dimension (mm)

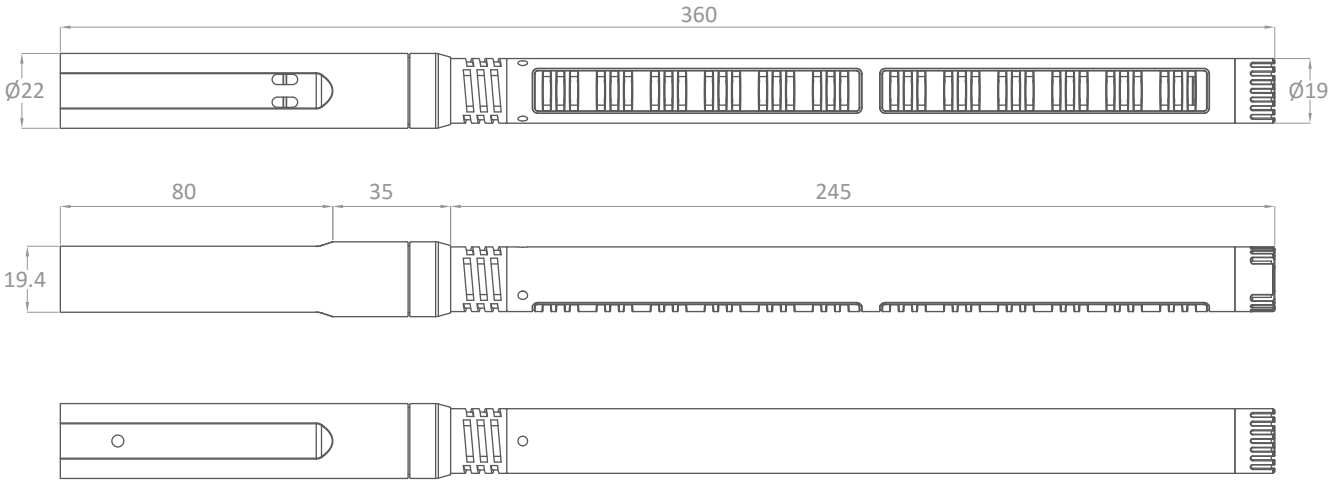

JTS® PROFESSIONAL CO., LTD.
No. 148, 9th Industry Road, Ta-Li Industrial Park,
Taichung City 41280, Taiwan.
Tel: 886-4-24938803 Fax: 886-4-24914890
E-mail: jts@jts.com.tw
www.jts.com.tw

59010-527-04