JTS PROFESSIONAL CO., LTD.

UDA-5800/UA-5800/UB-5800

Wireless Antenna System

English/繁體中文

INDEX

1. Important Caution 2

2. Features 2

3. Specification 3

3-1 UHF Directional Antenna // UDA-5800 3
3-2 Antenna Booster // UB-5800 3
3-3 Antenna Distributor // UA-5800 3
3-4 Coaxial-cable attenuation 4

4. Parts Identification & Accessories 4

4-1 UHF Directional Antenna // UDA-5800 4
4-2 Antenna Booster // UB-5800 4
4-3 Antenna Distributor // UA-5800 5
4-4 Accessories // UB-5800 5

5. Preparing Procedures & Basic Operation 6

5-1 How to connect // UDA-5800 / UB-5800 6
5-2 How to connect // UA-5800 7

6. System operation 8

6-1 How to use // UDA-5800/UB-5800 8
6-2 How to use // UA-5800 10

1. Important Caution

- Always makes all connections before plugging the unit into an AC power outlet.
- Do not leave the device in a place neither with high temperature nor high humidity.
- Always do not handle the power cord with wet hands!
- Keep the devices away from fire and heat sources.
- Caution : The suitable environment for this product is with a temperature between -10°C (14°F) and +50°C (122°F).

2. Features

UDA-5800 / UB-5800

- A wideband UHF antenna/booster with integrated bandpassfilter and low noise booster.
- Providing approximatively 7dB gain with typical beam-width of120 degrees.
- Antenna can work in 450-1000 MHz band (bypass mode).
- Frequency band step selection: Provides a 60 MHz bandwidth with band-pass filters adjustable in 10 MHz increments, for a total of 19 selectable bands.
- Full-color LCD display
- Automatic Gain Control: Paired with UA-5800, the host automatically measures signal loss along each coaxial cable segment and sets the optimal gain for every device. (±2dB)
- It is possible to enable the internal booster (1 dB step).
- The parameters of the amplifier can be adjusted through thecontrol interface of UA-5800.
- Lightweight, more compact design: Lighter and easier to carry than the UDA-49AP.

UA-5800

- The JTS UA-5800 is a full range UHF antenna splitter that routes antenna signals from a pair of antenna to several receivers in a multi-channel system.
- The UA-5800 also amplifies the RF signals to compensate the loss incurred from splitting signal power.
- Bulit-in DC distribution provides four DC 12V power supply for receivers.
- A single UA-5800 can support up to eight wireless receiver. Multiple UA-5800 can be cascaded for more wireless receivers.
- Frequency band step selection: Provides a 60 MHz bandwidth with band-pass filters adjustable in 10 MHz increments, for a total of 19 selectable bands.
- It offers six band selection options: Six-band selection: Three high and three low bands let users choose the best setting for different scenarios.
- Seamless pairing with UDA-5800 or UB-5800: It is an integrated operation within a 40 m sync-control range, ideal for large performances or complex systems.

3. Specification

3-1 UHF Directional Antenna // UDA-5800

Antenna	
Model	UDA-5800
Gain	7dBi
3-dB beam-width	horizontal plane 120° – vertical plane 90°
Band	Band Width :60MHz / Step: 10MHz Lo Band : 470-710MHz ; Hi Band : 720-960MHz (Filter Option)
Bandwidth	450~1000 MHz(Bypass Mode) 470~960MHz (Active Mode)
Control	Display menu or remote thru coaxial cable
Gain	-15 ~ +27 dB typical (1 dB step selection)
Bandwidth	470-1000 MHz
Gain flatness	+/-1 dB
Powering	+12 Vdc/55mA (Green led:0 ~ +13dB; Blue led: -13 ~ -1dB) +12 Vdc/110mA (Red led:+14 ~ +27dB) Orange led: Bypass
Operating voltage range	10~15Vdc
Dimensions	282.5mm(W)*384.5mm(H)

3-2 Antenna Booster // UB-5800

Control	Display menu or remote thru coaxial cable
Gain	-15 ~ +27 dB typical (1 dB step selection)
Bandwidth	470-960 MHz (depending on the variants)
Band	Band Width :60MHz / Step: 10MHz Lo Band : 470-710MHz ; Hi Band : 720-960MHz (Filter Option)
Gain flatness	+/-1 dB
Powering	+12 Vdc/55mA (Green led:0 ~ +13dB; Blue led: -13 ~ -1dB) +12 Vdc/110mA (Red led:+14 ~ +27dB) Orange led: Bypass
Operating voltage range	10~15Vdc
Dimensions	282.5mm(W)*384.5mm(H)

3-3 Antenna Distributor // UA-5800

Frequency Range	UHF 470~960MHz
Attenuation	-31dB ~ 0dB
Band	Band Width :60MHz / Step: 10MHz Lo Band : 470-710MHz ; Hi Band : 720-960MHz (Filter Option)
Cascade output level	0dB ~ +2dB
Output Connection Isolation	≧25 dB
Third Order Intercept Point	24 dBm
Impedance	50 Ohm
Power Consumption	74W
Input AC Voltage	100~240 VAC; 50/60 Hz: 2A
Output DC Voltage	+12V/0.5A x 8
Antenna Booster DC Voltage	12V/400mA

3-4 Coaxial-cable attenuation

Typical attenuation of most common coaxial cable (dB/100M)			
Cable type	100MHz	400MHz	900MHz
RG-58/U	14.5	30.8	50.2
4D-FB	9.7	17	24.8
5D-FB	7.5	13.5	20.5
RG-213/U	6.9	18.1	25.7

4. Parts Identification & Accessories

4-1 UHF Directional Antenna // UDA-5800

1. **SET:**Function-setup button; press and hold 2s to enter Setup Mode.
2. **EXIT**
3. **▲/▼**
4. **LCD display**
5. **LED Signal Indicator**
6. **PCB for directional antenna**
7. **Signal-output connector**

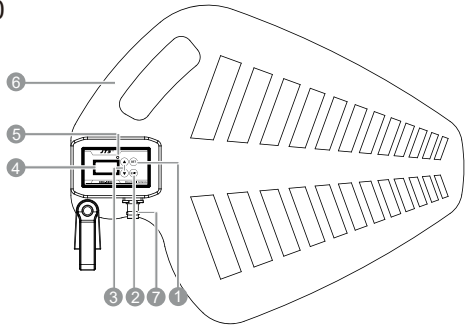

UDA-5800 LCD display content

1. **RF Signal**
2. **User Name**
3. **Gain**
4. **Frequency band**
5. **Power supply:** Normal operating range 10–15V

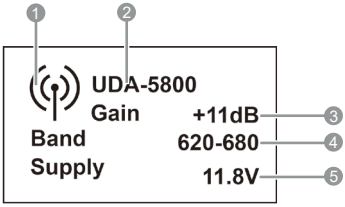

4-2 Antenna Booster // UB-5800

1. **SET:** Function-setup button; press and hold 2s to enter Setup Mode.
2. **EXIT**
3. **Up/Down selection keys**
4. **LCD display**
5. **LED Signal Indicator**
6. **Signal-input BNC connector**
7. **Signal-output BNC connector**

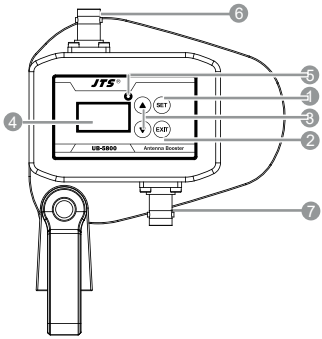

UB-5800 LCD display content

1. **Device ID**
2. **User Name**
3. **Gain**
4. **Frequency band**
5. **Power supply:** Normal operating range 10–15V

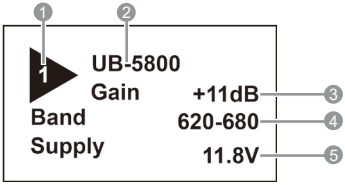

4-3 Antenna Distributor // UA-5800

Front

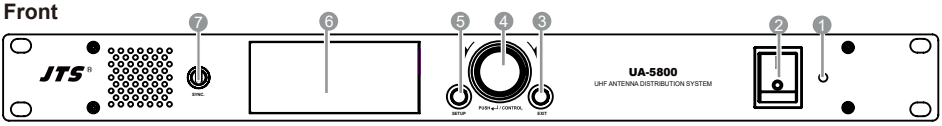

Back

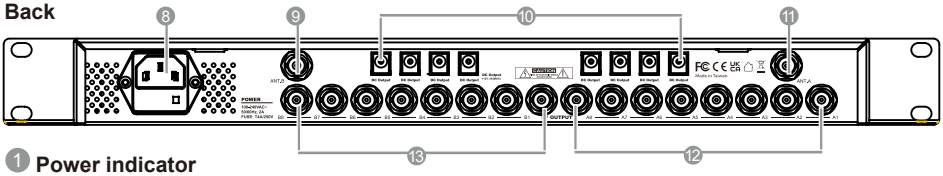

1. **Power indicator**
2. **Power switch**
3. **Exit key**
4. **Rotary knob**
5. **Setup key**
6. **LCD panel**
7. **Sync button (indicator)**
8. **AC power inlet C14 (with fuse)**
9. **Antenna-input BNC (B)**
10. **DC power output jack (12V/4A max)**
11. **Antenna-input BNC (A)**
12. **Signal-distribution output BNC connector (A1-A8)**
13. **Signal-distribution output BNC connector (B1-B8)**

UA-5800 LCD display content

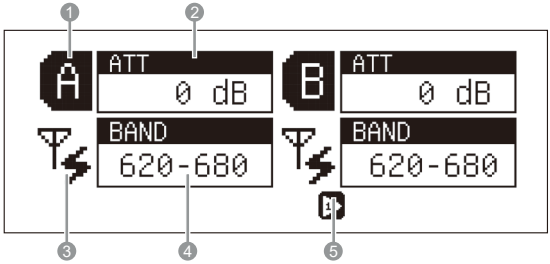

1. **Channel**
2. **Attenuation**
3. **Antenna power**
4. **Frequency band**
5. **Linked device**

4-4 Accessories // UB-5800

1. **Tripod Bushing**
2. **Metal Washer**
3. **Rubber Washer**
4. **Screws**
5. **Clamping Handle**
6. **Tripod Mount Bracket**

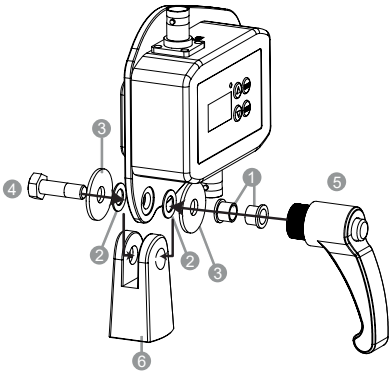

5. Preparing Procedures & Basic Operation

5-1 How to connect // UDA-5800 / UB-5800

(1) Each antenna input (A/B) on a UA-5800 can daisy-chain up to four devices
Example 1: UA-5800 + three UB-5800 units; mount the antenna on the signal-input BNC of the last UB-5800.
Example 2: UA-5800 + one UDA-5800, with one UB-5800 inserted in between.

(2) Notes for Installation
1.After all cabling is complete, power on the UA-5800. The unit detects the number of linked devices, automatically assigns IDs, and always sets the device at the far end of the chain as Antenna 1.
2.For cable-loss data, see 3-4 Typical Coaxial-Cable Attenuation. With a UB-5800 maximum gain of 27 dB, the recommended single-run lengths are:
Sample 1: RG-58/U, 5m – 50m
Sample 2: 4D-FB, 10m – 100m

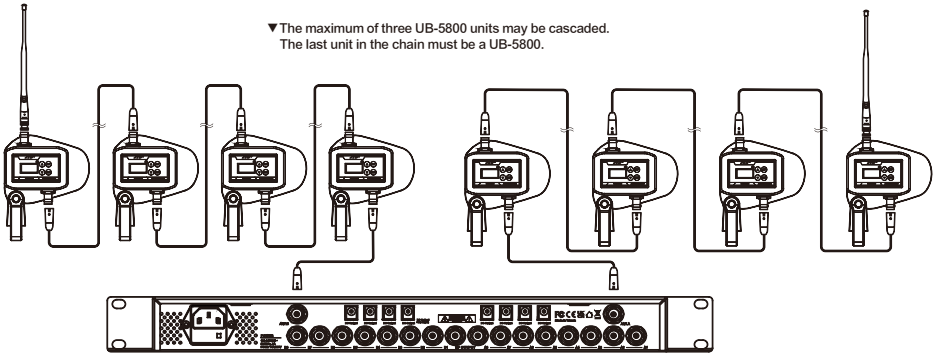

▲Example 1

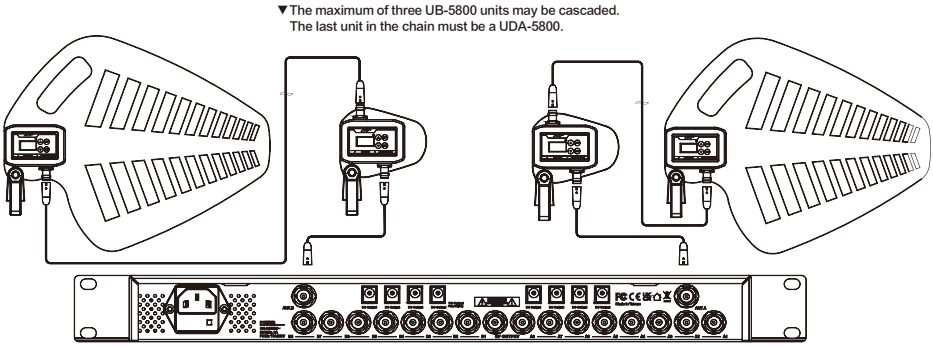

▲Example 2

5-2 How to connect // UA-5800

(1) Ensure all external devices are connected before turning on the UA-5800. Hot-plugging while powered is not recommended.
(2) Each antenna input (A/B) supplies 12V/0.4A. You may chain up to four UB-5800 or UDA-5800 units per port, but the quality and length of the coaxial cable must be able to keep the voltage at every unit ≥ 10V.
Example 3: When using RG-58/U at its 50m maximum, only three devices can typically be chained in practice.

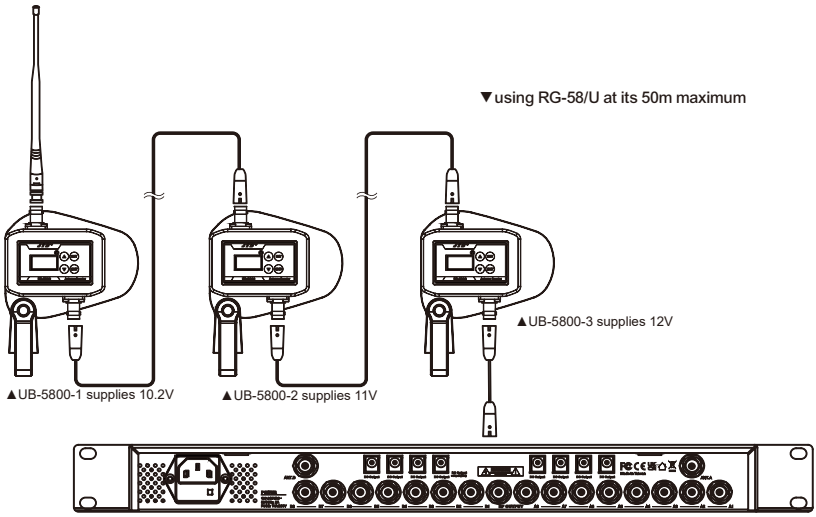

▲Example 3

(3) The UA-5800 provides a 12V/4A (±5 %) DC output for powering receivers (max. 8). Keep any single DC tap ≤ 0.75 A. Total output voltage and current are shown under System Info; the home screen warns if the ratings are exceeded.
Scenario 1: 12V/0.5A → up to 8 receivers.
Scenario 2: 12V/0.65A → up to 6 receivers.

Note: Leave each receiver's power switch ON and use the UA-5800 host to power the whole system simultaneously.

(4) Under normal circumstances, Channels A and B should be set to the same frequency band to avoid signal dropouts during receiver selection.

6. System operation

6-1 How to use // UDA-5800/UB-5800

Parameter setting

(1) The UDA-5800/UB-5800 can be connected to a UA-5800 with a coaxial cable for synchronous control, or you can set parameters manually on the device itself.
(2) Press and hold “SET” button for 2 s to enter the main menu. Use ▲/▼ buttons to choose an item. After changing any setting, press “SET” button again to save.
(3) Status LED Colors
Red: Active mode, gain: +14 ~ +27dB
Green: Active mode, gain 0 ~ +13dB
Blue: Active mode, gain -13 ~ -1dB
Yellow: Passive mode (Full-Band Bypass mode)

1.Mode
2.Band
3.Frequency
4.Gain
5.Username
6.Options
7.KeyLock
8.Exit

1. Mode

Active	Select with ▲/▼
Passive	Select with ▲/▼

Mode

Active Passive

2. Band

Full	470-570
Narrow	

Band

Full Narrow

3. Frequency (Narrow mode)

Lo Band	(470-530)~(650-710) (Step:10MHz)
Hi Band	(720-780)~(900-960) (Step:10MHz)

Frequency

620-680

4. Gain

Gain	-13 ~ +27dB (adjustable in 1 dB step)

Gain

+2 dB

5.User Name

Entry of User Name: Press ▲/▼ buttons to select letters, numbers, or symbols; press SET button to confirm each character and move to the next.

Edit User Name

UB-5800 1/8
Q R S T U V W X

6. Options

(1) Brightness

Brightness	1-8 (default5)

Brightness

5

(2) Light Time

15s ~ Keep on	Select with ▲/▼

Back Light Time

5 min

(3) Screen Color

Dark	Select with ▲/▼
Light	Select with ▲/▼
Color	Select with ▲/▼

Screen Color

Dark Light Color

(4) Language

English	Select with ▲/▼
中文	Select with ▲/▼

Language

English
中文

(5) Factory Reset

(6) Return

7. KeyLock

Enable	Select with ▲/▼
Disable	Select with ▲/▼

Key Lock

Lock
Unlock

8. EXIT

6-2 How to use // UA-5800

Parameter setting

(1) At power-on, the UA-5800 polls all connected UB-5800/UDA-5800 units, automatically assigns IDs, and shows acquisition status via the SYNC LEDs.
(2) Press “SET” button for 2 s to open the main menu. Turn the rotary knob to highlight a parameter. Press “SET” button or push the knob to edit; press “SET” button again to save. Press “EXIT” button to leave the menu.
(3) Follow the on-screen parameter menus for host settings and, after detection, for individual device settings (see Section 6-2 for details).
(4) The UA-5800 offers two built-in synchronization modes; refer to “6-3 Sync Settings” in the operation menu for configuration instructions.

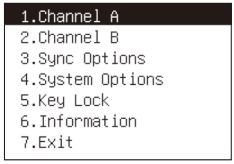

1.ChannelA/B

Band	Full/Narrow
Frequency	470-960
Attenuate	-31~0 dB
Ant.Powering	ON/OFF
Return	Returns to the previous screen.

*NOTE:Under normal operating conditions, Channels A and B should be set to the same frequency band.

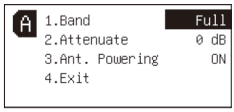

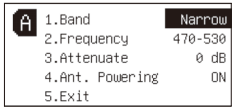

2.Channel A/B (after devices are linked)

Band	470-960
Attenuate	-31~0 dB
Ant.Powering	ON/OFF
UDA-5800_1 UB-5800_2 UB-5800_3 UB-5800_4	Once all cabling is finished, opening Channel A or Channel B in the menu automatically adds the newly connected antenna unit(s) and displays their information (see Figure 1). 1.Band:Cannot be edited here; when the system is in Sync mode, the UA-5800 is the band-setting host. 2.Mode:Active/Passtive Mode 3.Gain:-13~27dB 4.KeyLock 5.User Name 6.Return
Return	Returns to the previous screen.

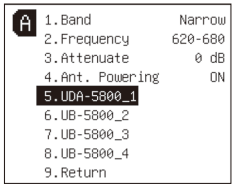

▲Figure 1: Added after connecting the antenna.

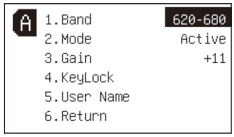

▲UDA-5800_1

3.Sync Options

Disable	Disabling Sync
Manual Mode	(1) Startup information scan: Sync LED solid yellow while scanning, then solid green when finished. All parameters from every daisy-chained unit are now shown in the host's menu. (2) Sync after parameter changes: From the Figure 1 menu, select and change any desired parameter except "Band." Save after changes and press the SYNC button, and the LED blinks yellow. Wait for the host's display to show "Sync Complete" (Figure 2).
Automatic Mode	(1) Startup information scan: Sync LED solid purple while scanning, then solid blue when finished. The parameters of all devices connected to the host appear in the host' menu. (2) Auto-sync: In Figure 1 you may change only "Key Lock" or "User Name". Save after changes and press the SYNC button, and the LED blinks purple. Wait for the host's display to show "Sync Complete" (Figure 2). *The host automatically measures signal loss along each coaxial cable segment and sets the optimal gain for every device.(+-2dB)

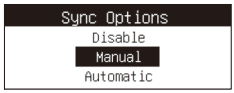

▲Figure 2: Channel A has no device connected, Channel B has a device and synchronization is complete

4.System Options

contrast	0-9
Brightness	0-9
Language	中文/English
Factory Reset	Restore factory settings

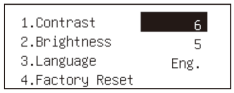

5.Key Lock

Lock	KeyLock OFF
Unlock	KeyLock ON

6.Information

DC Voltage	10 ~ 15v(normal) Exceeding the rated voltage triggers an on-screen warning.
DC Current	0 ~ 4.6A(normal) Exceeding the rated voltage triggers an on-screen warning.
Fan Status	Displays current fan condition.
Firmware Version	Shows installed firmware version.
Hardware Version	Shows installed hardware version.

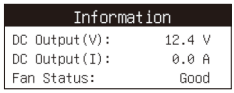

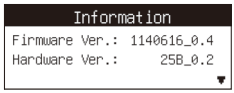

7.Exit

JTS® PROFESSIONAL CO., LTD.
No. 148, 9th Industry Road, Ta-Li Industrial Park,
Taichung City 41280, Taiwan.
Tel: 886-4-24938803 Fax: 886-4-24914890
E-mail: jts@jts.com.tw
www.jts.com.tw Made in Taiwan

59010-550-01