JS-1P *Standard Version (Single Capsule)*

JTS®

Features

- **Condenser microphone with USB output for digital recording**
- **Headphone jack with volume control allows you to monitor microphone and background music on the computer with no delay**
- **Cardioid pattern with high sensitivity records sound sources in front of the microphone. You can't go wrong using this for most recording applications.**
- **Instant mute function**
- **Comes with light threaded stand and USB type B cable.**
- **Available in black**

CARDIOID PATTERN

With high sensitivity to sources in front of the microphone, excellent sound isolation is achieved to unwanted sound outside of the pickup pattern. This is a perfect solution for studio, stage and podcasting.

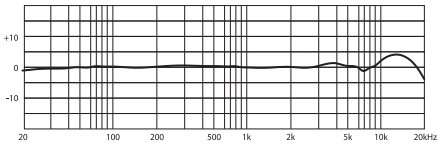

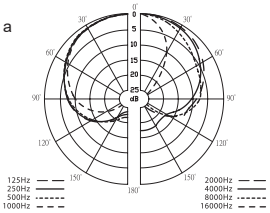

Specification

USB Connector：Type B
USB Type：USB 1.1 / USB 2.0 / USB3.0
Bit Depth：16/24 bits
ADC：44.1~96KHz
DAC：44.1~96KHz
Indicator (when connected to USB)：Mute► RED / Talk► GREEN
Frequency Response：20~20,000 Hz
Transducer Type：Condenser
Polar Pattern：Cardioid
Controls: Earphone volume adjustment + Mute control (digital control)
Monitor switch
Headphone Jack：3.5mm，Stereo
Output：55mW+55mW (32Ω)：T.H.D.<0.8%
Power Consumption：1W
Cable：2.0M ±0.1M (Type -A – Type- B)
Dimension (mm)：56mm(W)* 184mm(H)
Weight (microphone)：420g

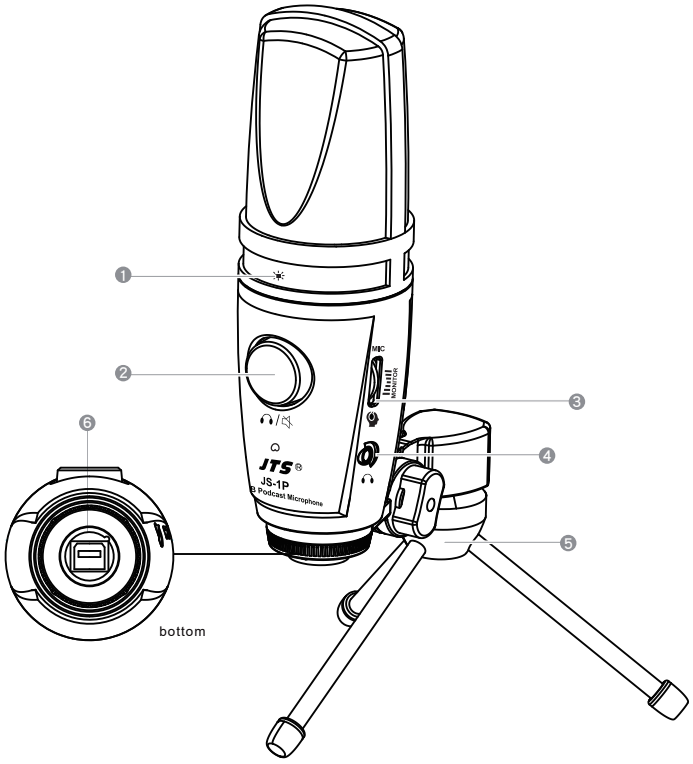

Description of parts

1. **LED Display:** RED: Mute, red light shows when connected to computer and the product is turned in mute state.
   GREEN: Talk, the microphone is turned on.
2. **Mute and Headphone Volume Adjustment:** After connecting to the computer, the JS-1P is mute by default. Press the knob to switch between Mute or Talk, and rotate the knob to adjust the headphone volume.
   *Note: In the mute state, the user's microphone is turned off, and the headphones and volume adjustment function normally.
3. **Monitor Volume Adjustment:** Turn up to the bottom to listen to the user's voice; turn down to the bottom to listen to the computer's output sound; the range in-between can adjust the microphone or computer sound volume ratio.
4. **Headphone Jack:** 3.5mm，STEREO
5. **Threaded Stand (Standard model JS-1P)**
6. **USB Connector:** Use the included USB cable to connect the JS-1P with the computer.

Accessories (Optional)

- Adjustable Tripod Stand
- Special Designed Stand
- Spider Mic Holder Stand
- Universal Microphone Pop Filter

Connecting

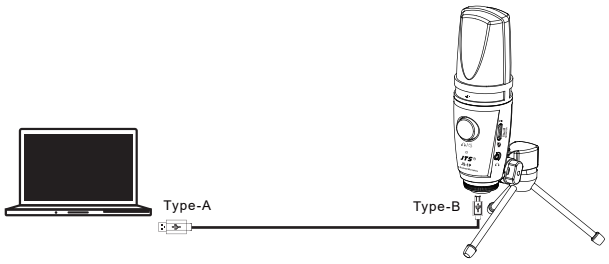

Use the included USB cable to connect the JS-1P at the Type-B end and the computer at the other end.

Note

- Warning: After connecting to a computer, please adjust the volume of the JS-1P to the minimum and then adjust the volume after connecting the headphones.
- Don't connect to USB-Hub
- Long USB cable may not be connected to the computer
- Not all computer operating systems (dated operating systems may cause operation problem) can operate this product properly.
- Please plug the USB directly into the USB socket; please remove the USB cable when the product is not in use.
- When you need to record, please test beforehand to make sure the recording function is available.
- Please be noted that we do not compensate for software or equipment connected to this product.
- Do not disassemble the product by yourself.
- Keep hands dry while using.
- Do not store the product in hot or humid places.
- Android mobile devices may require an OTG adapter cable.
- iOS mobile devices require original "camera adapter".
- Not all Android or iOS devices are compatible. If you have any questions, please consult the original manufacturer or agent.

JTS® PROFESSIONAL CO., LTD.
No. 148, 9th Industry Road, Ta-Li Industrial Park, Taichung City, Taiwan.
Tel: 886-4-24938803 Fax: 886-4-24914890
E-mail: jts@jts.com.tw
www.jts.com.tw

59010-545-02