NX-9

SPECIFICATION

- High Gain, Low Noise
- Type:Unidirectional electret condenser
- Frequency Response:60 to 18,000Hz (see Figure 1)
- Polar Pattern: Cardioid, rotationally symmetrical about microphone axis, uniform with frequency (see Figure 2)
- Output Level (at 1,000Hz) Open Circuit Voltage:-70dB*(0.32mV) * [OdB=1V/μ bar]
- Impedance: Rated impedance is 520Ω for connection to microphone inputs rated low Z
- Phasing: Positive pressure on diaphragm produces positive voltage on pin 2 with respect to pin3
- Connector: Three-pin professional audio connector (male XLR type)
- Case Metallic enamel-painted die cast metal with hardened, matte-finished steel grille
- Net Weight: 190 grams (6.70oz)
- Power type: Dual Power 9-52V Phantom Power / Battery UM-3(AA)1.5V (see Figure3)

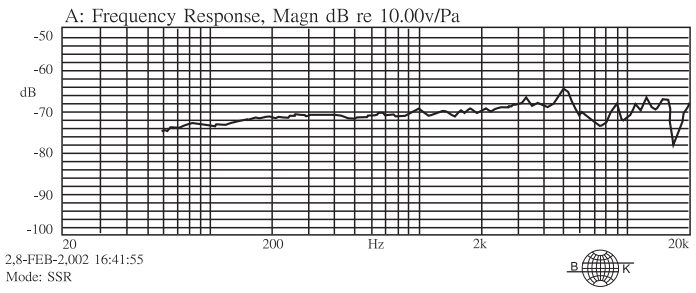

0 degree, 50cm

TYPICAL FREQUENCY RESPONSE

Figure 1

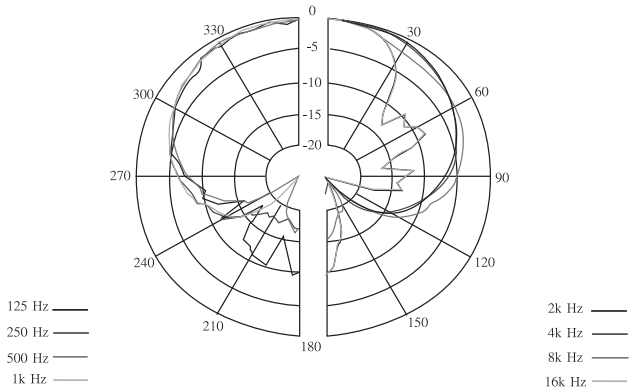

TYPICAL POLAR PATTERN

Figure 2

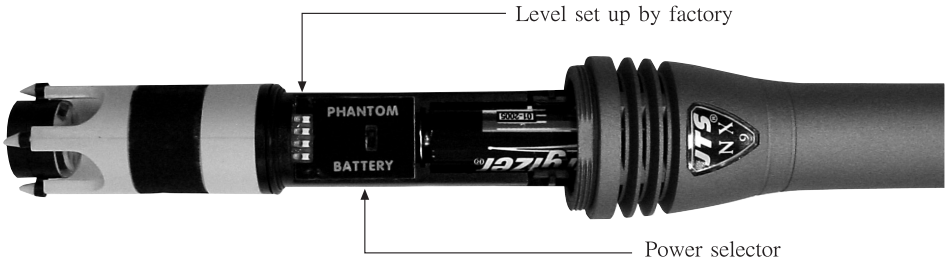

Figure 3

Dimensions

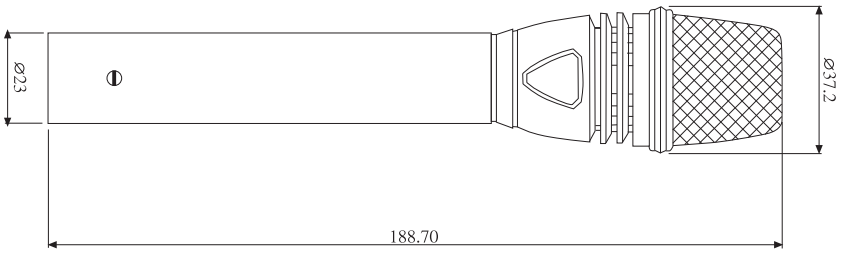

unit:mm

NX-9 Battrey/Phantom
Cardioid Condenser Microphone

NX-9-02

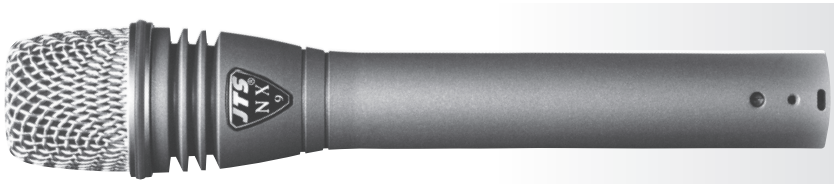

The NX-9 is a cardioid, superior low-noise, condenser microphone.
The NX-9 is optimal for overhead, hi-hat, acoustic guitar and other instruments.

The extended and flat frequency response insures NX-9 natural transparent sound quality. The cardioid directional pattem provides maximum gain before feedback and ensures maximum isolation from unwanted sound sources. The excellent shock mount device minimizes all the noise from handling, cable and stand.

The overall designed structure including a hardened grill insures NX-9 to withstand rugged Environment.

NOTE

1.If remote power is not available, install a UM-3(AA)1.5V battery. Drive the screw located at the bottom of the mic. body anti-clockwise and screw off the grill. Pull out the battery compartment. Install the battery with correct polarity and switch the power selector to "battery" position(see Figure 3).
2.Remember to remove the battery when do not use the microphone for long time.
3.The miking effect will vary according to the distance between sound source and the microphone (proximity effect)
4.Miking is a technique and an aet. Always try to find your favorable miking method.
5.Avoid leaving the microphone in an environment where the temperature, humidity or both are extremely high.