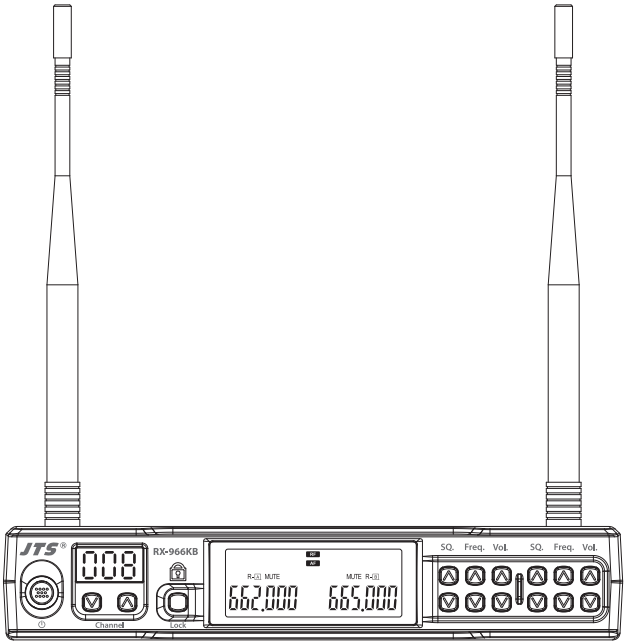

JTS®PROFESSIONAL CO., LTD.
No. 148, 9th Industry Road, Ta-Li Industrial Park,
Taichung City, Taiwan, R.O.C.
Tel: 886-4-24938803 Fax: 886-4-24914890
E-mail: jts@jts.com.tw
www.jts.com.tw

59508-070-07

JTS PROFESSIONAL CO., LTD.

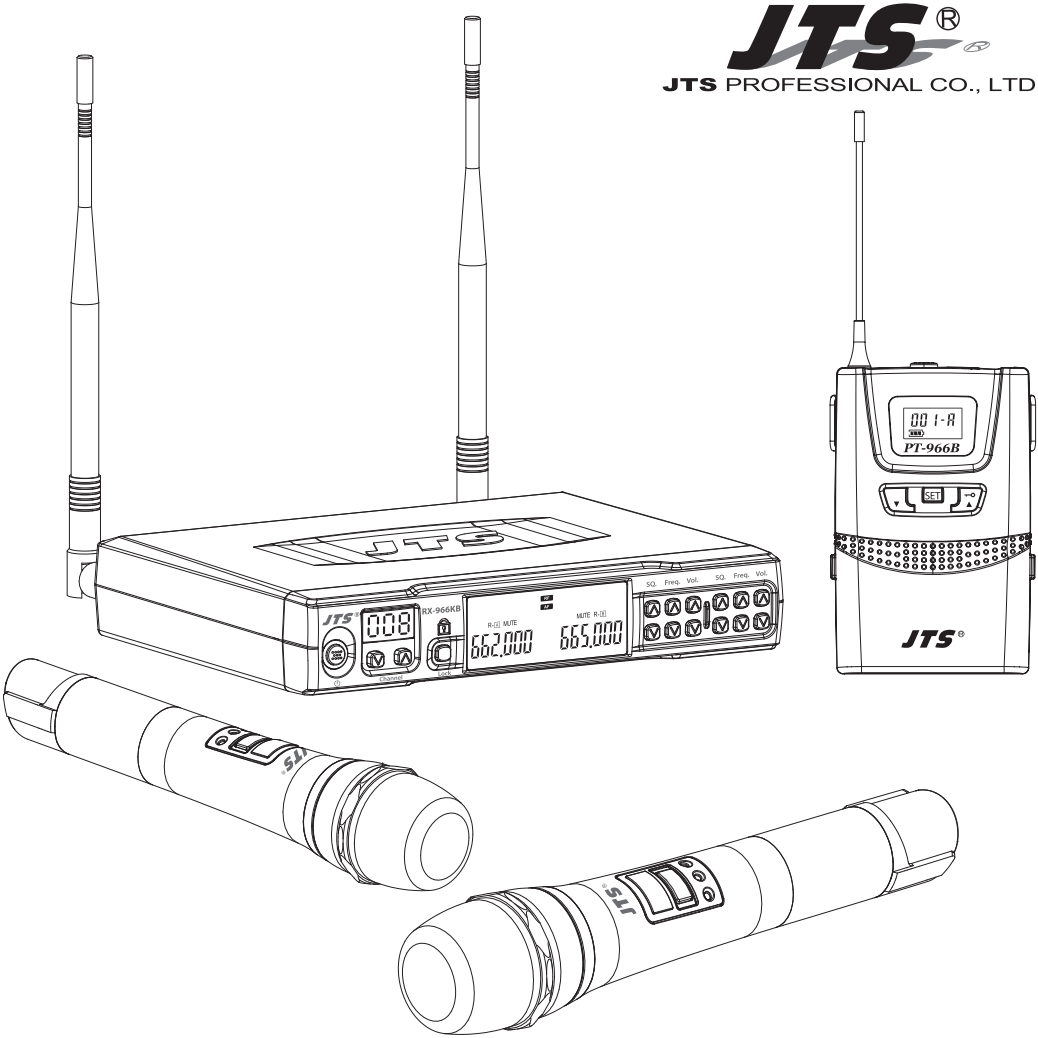

Instruction Manual

UHF PLL

RX-966KB / TX-966K / PT-966B

36MHz Dual Channel Wide Bandwidth Wireless System

Thank you for choosing the JTS wireless system. In order to obtain the best efficiency from the system, you are recommended to take a few minutes to read this instruction manual carefully.

INDEX

1. Important Caution 1
2. Features 1
3. Specification 2
   3-1 UHF PLL Dual Channel Diversity Receiver // RX-966KB 2
   3-2 UHF PLL Handheld Transmitter // TX-966K 2
   3-3 UHF PLL Body-Pack Transmitter // PT-966B 3
   3-4 Optional Condenser Microphone 3
4. Part Identification & Accessories 6
   4-1 UHF PLL Dual Channel Diversity Receiver // RX-966KB 6
   4-2 UHF PLL Handheld Transmitter // TX-966K 9
   4-3 UHF PLL Body-Pack Transmitter // PT-966B 10
   4-4 Accessories 11
   4-5 Optional Condenser Microphone 11
5. Connection 14
6. Operation 15
7. Recommendation 21
8. Important Notice 22

1. Important Caution

- Always make all connections before plugging the unit into an AC power outlet.
- Do not leave the device in a place neither with high temperature nor high humidity.
- Always do not handle the power cord with wet hands!
- Keep the devices away from fire and heat sources.
- Make sure receiver/transmitter are in the same preset channel or frequency.

2. Features

- At super-wide band of 36 MHz, specially intended for exquisite KTV rooms and classrooms
- Operation functions designed to be user-friendly
- Preset with 241 pairs of channels
- Unprecedented 001-241 coded reception/transmission channels
- Dual channel (receiving) set with one key
- All-new D-36K high sensitivity and anti-feedback capsule
- Adjustable squelch level at front panel

3. Specification

3-1 UHF PLL Dual Channel Diversity Receiver // RX-966KB

Frequency Preparation.....	PLL Synthesized Control
Carrier Frequency Range	36MHz within 502~960 MHz
S/N Ratio.....	>105dB
T.H.D.....	<0.6%@1KHz
Display.....	LCD/LED
Display Contents.....	Channel, Antenna A/B, Mute Display, RF/AF Level Meter, Low battery, SQ
Controls.....	Power On/Off, Frequency Up/Down, Volume, SQ, Preeset channel 001~241
Audio Output Level.....	-12dB
AF Output Impedance.....	600Ω
Operation Voltage.....	12-18 VDC, 500mA
Output Connector.....	2 XLR Balanced Sockets 1 Unbalanced Ø6.3mm Phone Jack
Dimension(m/m).....	210mm(W) * 40mm(H) * 172mm(D)

3-2 UHF PLL Handheld Transmitter // TX-966K

Frequency Preparation.....	PLL Synthesized Control
Carrier Frequency Range.....	502~960 MHz
RF Outputs.....	Low , High
Stability.....	±10KHz
Frequency Deviation.....	±48KHz
LCD Display.....	Preset channel, Battery Fuel Gauge, Frequency
Controls.....	Power On/Off, Frequency Up/Down, Lock-on Mode,Preset channel,A or B channel select, RF outputs adjust, Gain control
Spurious Emissions.....	<-50 dBC
Audio Frequency Response	50~16,000 Hz
Battery.....	UM3, AA 1.5V*2

3-3 UHF PLL Body-Pack Transmitter // PT-966B

Frequency Preparation	PLL Synthesized Control
Carrier Frequency Range	502~960 MHz
RF Outputs	Low , High
Stability	±10KHz
Frequency Deviation	±48KHz
LCD Display	Preset channel, Battery Fuel Gauge, Frequency
Controls	Power On/Off, Frequency Up/Down, Lock-on Mode,Preset channel,A or B channel select, RF outputs adjust, Gain control
Input connector	4P mini XLR
Spurious Emissions	<-50 dBC
Audio Frequency Response	50~16,000 Hz
Battery	UM3, AA 1.5V*2

3-4 Optional Condenser Microphone

Lavaliere Microphone

Model No.	CM-501	CM-201i	CM-125i
Connector	4P Mini XLR	4P Mini XLR	4P Mini XLR
Frequency Response	100~15,000 Hz	60~15,000 Hz	50~18,000 Hz
Polar Pattern	Cardioid	Omni-directional	Omni-directional
Sensitivity (at 1000Hz)	-60±3 dB	-60±3 dB	-53±3 dB
Impedance	2.2kΩ	2.2kΩ	4.4kΩ
Max. SPL for 1% THD	130dB	130dB	130dB
Dimension(mm)	Ø10.1mm(W) * 26.4mm(H)	Ø5mm(W) * 9mm(H)	Ø4mm(W) * 11mm(H)
Net Weight	21.5g	20.7g	7g (cable excluded)

Headset Microphone

Model No.	CM-214i	CM-214Ui	CM-214ULi
Connector	801C4 (4P Mini XLR)	4P Mini XLR	801C3 (3P Mini XLR) 801C4 (4P Mini XLR) 801CS (3.5 stereo plug)
Option Connector	801C3 (3P Mini XLR) 801CS (3.5 stereo plug) 801CR		801CR
Frequency Response	60~15,000 Hz	30~18,000 Hz	100 ~ 18,000Hz
Polar Pattern	Omni-directional	Cardioid	Cardioid
Sensitivity (at 1000Hz)	-60±3 dB	-68±3 dB	-65±3 dB
Impedance	1.8kΩ	680Ω	1.8kΩ
Max. SPL for 1% THD	130dB	130dB	120dB
Dimension(mm)	125mm(W) * 134mm(H) * 157mm(D)	205mm(W) * 134mm(H) * 157mm(D)	125mm(W) * 134mm(H) * 157mm(D)
Net Weight	32.9g	38.4g	18g (cable excluded)

Model No.	CM-235i	CX-504
Connector	801C4 (4P Mini XLR)	4P Mini XLR
Frequency Response	50~18,000 Hz	30~18,000 Hz
Polar Pattern	Omni-directional	Cardioid
Sensitivity (at 1000Hz)	-53±3 dB	-68±3 dB
Impedance	1.8kΩ	680Ω
Max. SPL for 1% THD	130dB	130dB
Dimension(mm)	155mm(W) * 134mm(H) * 157mm(D)	285mm(W) * 55mm(H) * 111.3mm(D)
Net Weight	17g (cable excluded)	56.3g

Ear-hook Microphone

Model No.	CM-801/CM-804i	CM-8015/CM-825i
Connector	801C4 (4P Mini XLR)	801C4 (4P Mini XLR)
Option Connector	801C3 (3P Mini XLR) 801CS (3.5 stereo plug) 801CR	801C3 (3P Mini XLR) 801CS (3.5 stereo plug) 801CR
Frequency Response	60~15,000 Hz	50~18,000 Hz
Polar Pattern	Omni-directional	Omni-directional
Sensitivity (at 1000Hz)	-64±3 dB	-53±3 dB
Impedance	1.8kΩ	1.8kΩ
Max. SPL for 1% THD	130dB	130dB

Compatible Instrument Microphone

Model No.	CX-500	CX-500F	CX-520
Connector	4P Mini XLR	4P Mini XLR	4P Mini XLR
Frequency Response	20~20,000 Hz	20~20,000 Hz	50~16,500 Hz
Polar Pattern	Omni-directional	Omni-directional	Supercardioid
Sensitivity (at 1000Hz)	-58±3dB	-58±3dB	-78±3dB
Impedance	1.5kΩ	1.5kΩ	600Ω
Max. SPL for 1% THD	130 dB	130 dB	148 dB
Good For	Violin	Flutes	Harmonica

Model No.	CX-508W	CX-516W
Connector	4P Mini XLR	4P Mini XLR
Frequency Response	50~18,000 Hz	30~18,000 Hz
Polar Pattern	Cardioid	Cardioid
Sensitivity (at 1000Hz)	-67±3 dB	-67±3 dB
Impedance	220Ω	220Ω
Max. SPL for 1% THD	130 dB	130 dB
Good For	Winds	Accordion

4. Parts Identification & Accessories

4-1 UHF PLL Dual Channel Diversity Receiver // US-966KB

Front Panel

1. Power Switch
2. Lock on/off
3. Volume Contol
4. Frequency
5. Squelch Adjustment
6. Channel Select
7. LED Channel Code Display
8. LCD Frequency Display

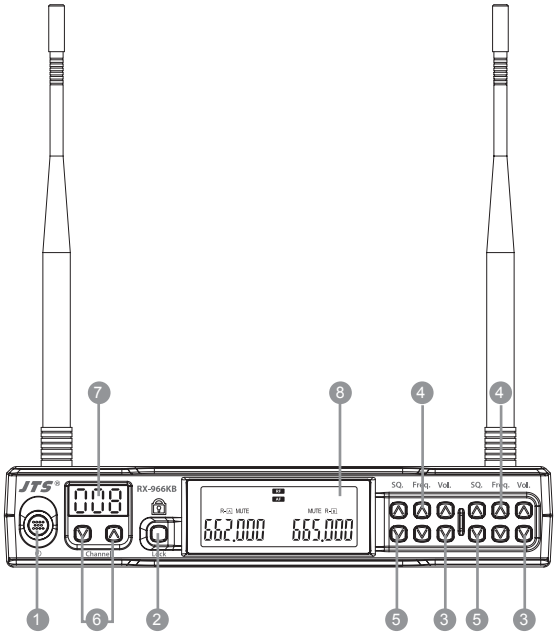

LCD Panel of the Receiver

9 RF : RF Level: display the strength of radio signal

10 AF : AF Level: display the strength of audio signal

11 : Low battery indicator: display the low battery status of its transmitter

12 R-A : Channel A on Right side; R-B Channel B on Right side

13 MUTE : MUTE is displayed on screen when the receiver does not receive signals from the transmitter

14 : This antenna icon, indicating "Receiving", is displayed on screen when the receiver receives signals from the transmitter

15 LCD display: Displays frequency, volume and sensitivity; a corresponded value is displayed on screen when the receiver frequency, volume or sensitivity is being adjusted.

16 : Lock on: the panel keys have been locked by the "Lock" key and are unable to adjust or set.

17 FREQ : indicates the receiver frequency is being adjusted

18 SQ : indicates the receiver squelch level is being adjusted.

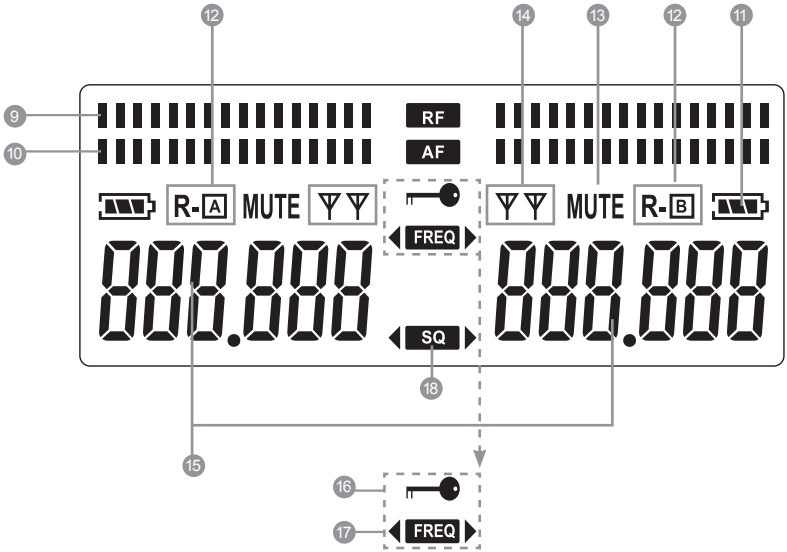

Rear Panel

⑲ Antenna

⑳ Balanced 6.3mm jack Output: for connection to the balanced input, e.g. of a mixer or an amplifier

㉑ Mixed AF Output (6.3mm jack, unbalanced): for connection to a balanced input, e.g. of a mixer or amplifier

㉒ Power Supply Jack (12-18V/500mA): for connecting the power supply unit

㉓ Gain Adjust

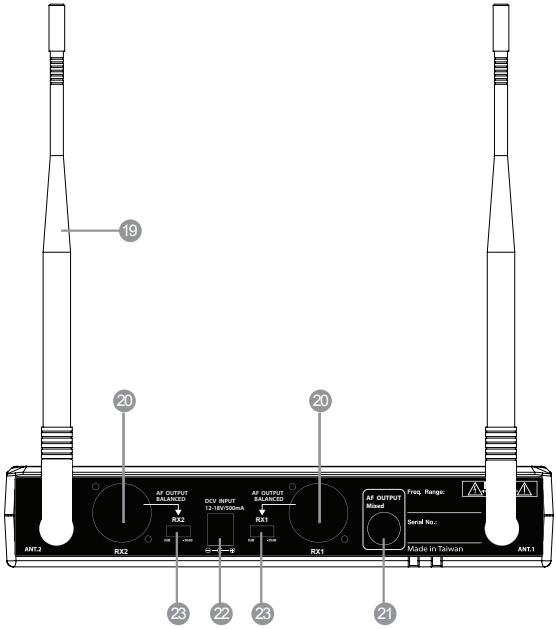

4-2 UHF PLL Handheld Transmitter // RX-966KB

㉔ LCD Display
㉕ Power Switch
Power On/Off: Press button for 3 seconds to turn On/Off the power.
㉖ ▲ ： Up button: select the settings of transmitter
㉗ ▼ ： Down button: select the settings of transmitter
㉘ Set button: set the configuration of handheld transmitter
㉙ Battery Tray

[Remarks]
Adjusting SET,▲, ▼ keys
Please use a 1.5-2.5mm-diameter flat-headed tool and not a pointed one to avoid damaging the buttons.

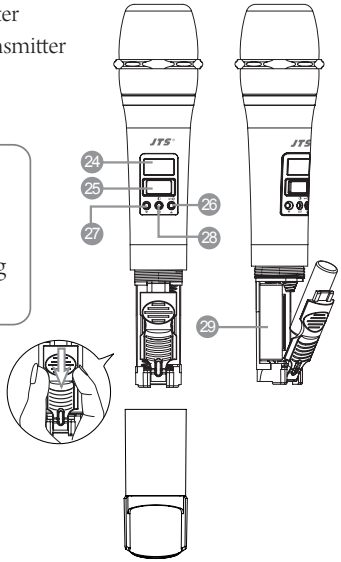

4-3 UHF PLL Body-Pack Transmitter // PT-966B

30 LCD Display
31 Battery Tray
32 Set button: set the configuration of bodypack transmitter
33 Up button: select the settings of transmitter
（Under main menu screen, press [▲ ⊸] button for 1 second to lock the setting key, press again to unlock the setting key）
34 Down button: select the settings of transmitter
35 Power Switch

LCD Panel of the Body-Pack Transmitter

36 Battery status: display battery status
37 Group & Channel: 241 preset channels

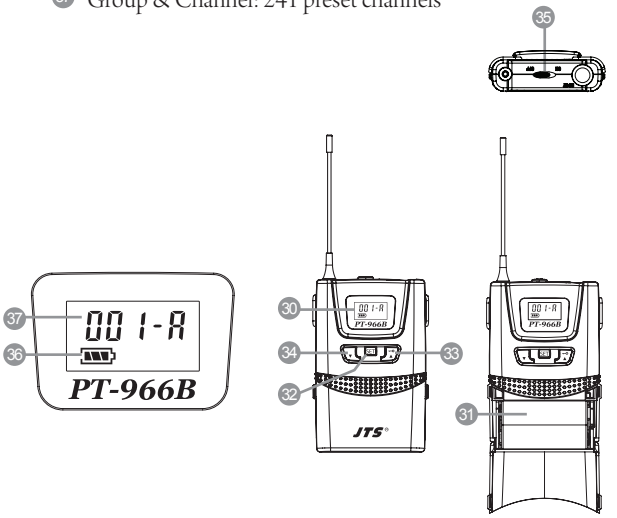

4-4 Accessories

㊳ AC/DC adaptor
Switching Power Supply(100V~240V , 50~60Hz)
AC IN: AC100~240V/50~60Hz
DC OUT: DC12V/0.5A
㊴ AF output cable (with Φ6.3 plug at both ends)
㊵ Screwdriver

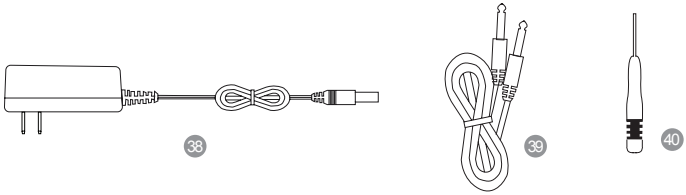

4-5 Optional Condenser Microphone

Lavaliere Microphone // CM-501 / CM-201i / CM-125i

㊶ Clip
㊷ 4 Pin Mini XLR
㊸ Windscreen

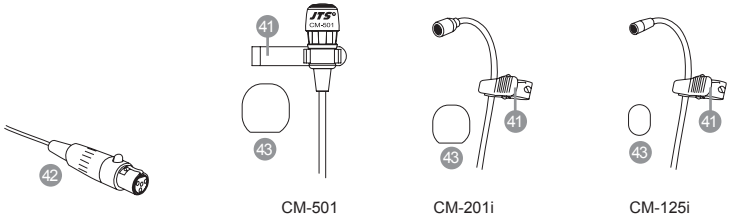

Headset Microphone // CM-214i / CM-214Ui / CM-214ULi / CM-235i / CX-504

44 Gooseneck
45 Adjustable headband
46 Headband
47 4 Pin Mini XLR
48 Windscreen

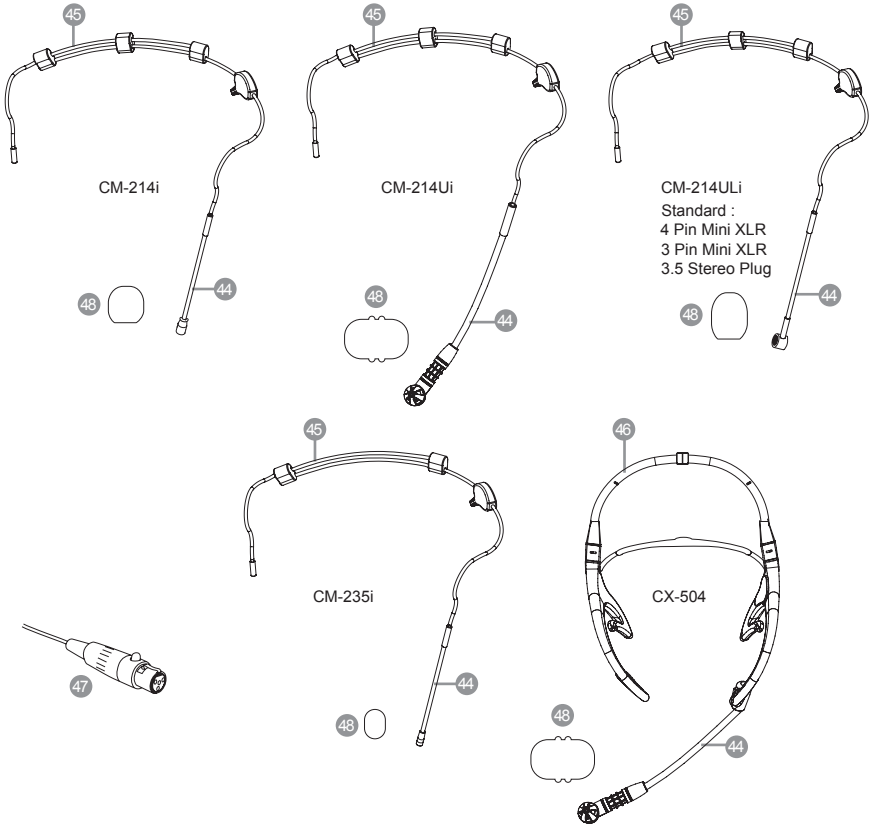

Ear-hook Microphone // CM-801 CM-804i CM-8015 CM-825i

49 Boom
50 Adjustable Headband
51 Adjustable ear hook
52 Detchable Cable
53 Cable Clip
54 Windscreen
55 4 Pin Mini XLR
56 3 Pin Mini XLR Option
57 3.5 Stereo Plug Option
58 4Pin Hirose connecter Option

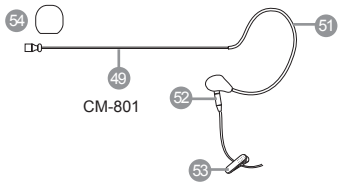

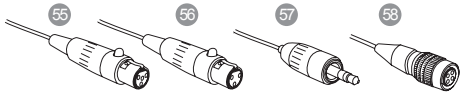

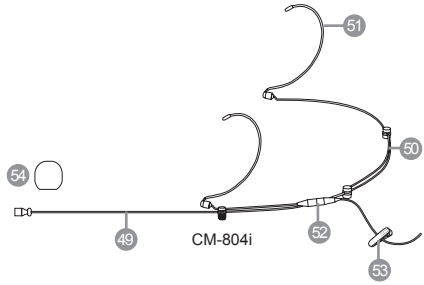

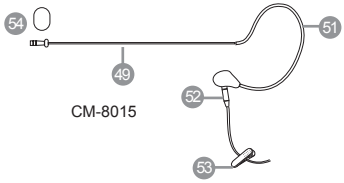

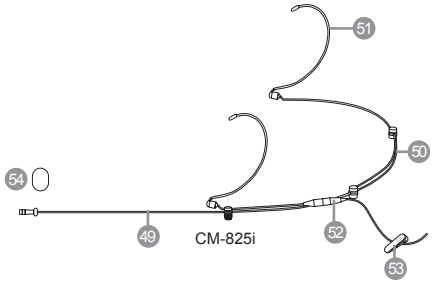

5. Connection

5-1 Receiver //

(1) Connect to the subsequent unit (e.g. mixer, or amplifier)
Connect one end of a proper AF cable to the AF Output 20 or AF Output mixed 21 , then plug another end to the "MIC IN" input socket of a mixer or a amplifier (Step 1 of Figure 1)

(2) Connect the power supply unit
Plug in one end of AC/DC adaptor cable 30 to Power Supply Jack 22 in the rear panel of receiver, and plug another end into an AC outlet
(Step 2 of Figure 1)

Caution

To prevent accidental disconnection of the plug of the power supply unit from the jack, lead the cable around the hook for strain relief. 59

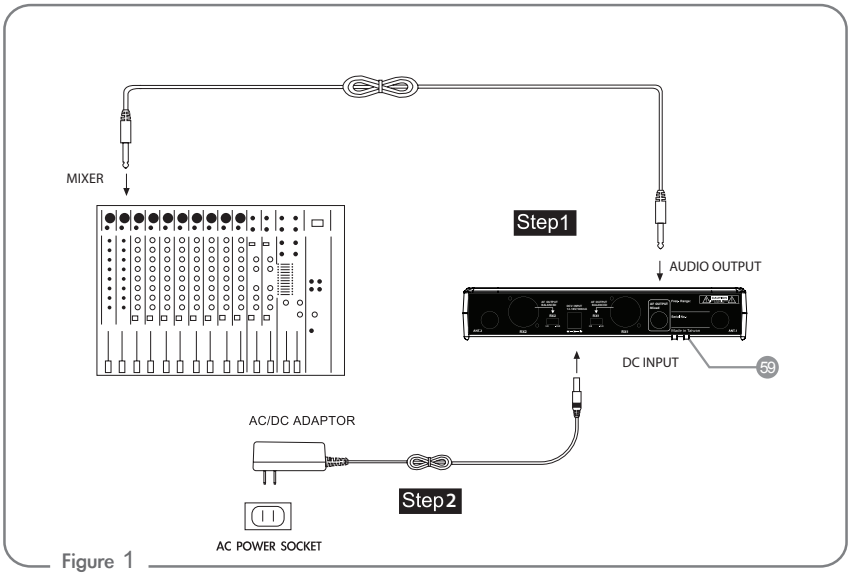

Figure 1

6. Operation

6-1 Setting RX-966KB receiver system

1. Turn on the power to the receiver
   (1) Pull the receiver antenna out.
   (2) Press the power switch ❶ to turn on the power.
   (3) To turn off: Keep pressing the power switch down; the power is off about 1 second later.

2. Set the preset channels for receiver
   Press the Channel Select ❻ ▲, ▼ keys to select RX-966KB preset channels; a total of 241 sets are available. A preset channel is displayed by the LED ❼ while the corresponded frequency is displayed on LCD ❽. Keeping ▲ or ▼ pressed down can change the channels faster. (Fig.2)

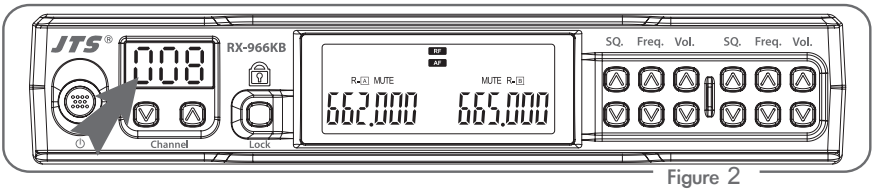

Figure 2

3. Frequency key
If to adjust the frequency as you like rather than using a preset channel, press the Frequency key ❹ ▲, ▼ to adjust the frequency at an increment of "+/-" 0.025MHz; keeping the ▲ or ▼ keys pressed down makes the frequency change faster. (Fig.3)

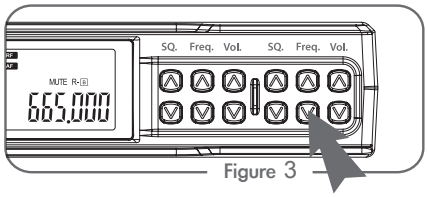

Figure 3

4. Volume key
Press ❸ ▲, ▼ to adjust the volume as needed in the range between 0 and 31dB; keeping the ▲ or ▼ keys pressed down makes the volume change faster. (Fig.4)

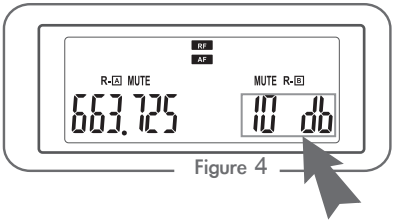

Figure 4

5. Squelch Key

Presss ❺ ▲, ▼ to adjust the squelch level between -10~+15; keeping the ▲ or ▼ keys pressed down makes the sensitivity adjustment faster,Presss ▲, ▼ to adjust the squelch level between -10~+15; keeping the ▲ or ▼ keys pressed down makes the sensitivity adjustment faste.Pay attention to that the larger the SQ value the shorter the operation distance will be.(Fig.5)

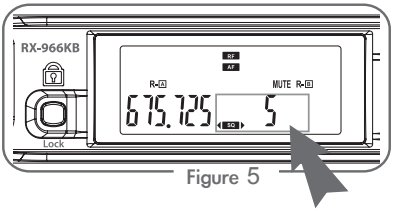

Figure 5

6. Lock key

When the setting of panel keys is complete, keep pressing the Lock key ❷ and after about 2 seconds the panel keys are locked from being adjusted or set. To unlock, just keep pressing the Lock key for about 2 seconds. (Fig.6)

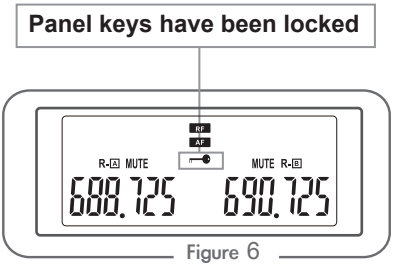

Figure 6

6-2 Setting the RX-966KB Handheld transmitter / PT-966B Body-Pack transmitter

1. Turn on / off the power

(1) Handheld transmitter

A. To turn on:Press the Power switch ㉕ to turn on the power of the transmitter.

B. To turn off: Keep pressing down the Power switch and the power is off about 3 seconds later.

(2) Body-Pack transmitter

A. To turn on: Switch the power switch to on.

B. To turn off: Switch the power switch to off.

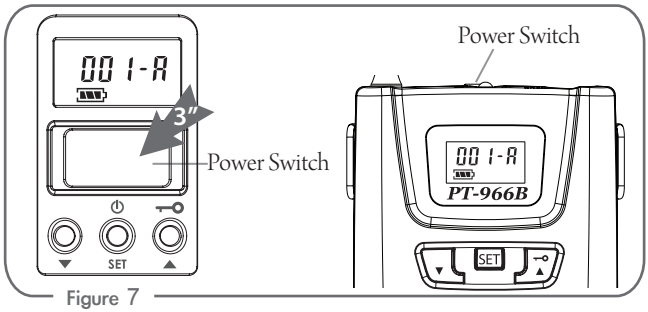

Figure 7

2. Adjusting frequency

When setting the frequency as desired, make settings as 2-1 and 2-2.

2-1 When frequency is displayed on screen

(1) Press down SET key ㉘ for 2 seconds.

(2) With the 3 digits on the left of the LCD blinking (Fig.8), press ▲ or ▼keys to change the frequency at an increment of "+/-" 1MHz (keeping the ▲ or ▼keys pressed down makes the number change faster). Press SET key to set, and the 3 digits on the right of the LCD blinking (Fig.9); press ▲ or ▼keys to change the frequency at an increment of "+/-" 0.025MHz (keeping the ▲ or ▼keys pressed down makes the number change faster). Press SET key to save the set value.

When these blink, adjust by +/- 1 MHz

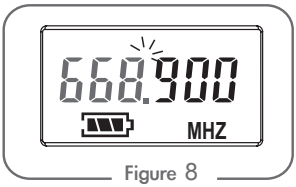

Figure 8

When these blink, adjust by +/- 0.025 MHz

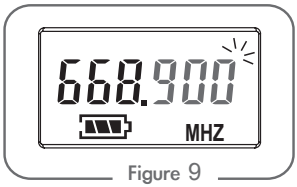

Figure 9

2-2 When setting your desired frequency while a preset channel is displayed on screen:
(1) Press down SET key ㉘ for 2 seconds.
(2) The 3 digits on the left of the LCD begin to blink; press SET key twice to display the frequency on LCD (Fig.10), now adjust the frequency by the same step of "2-1 When frequency is displayed on screen – Point (2)".

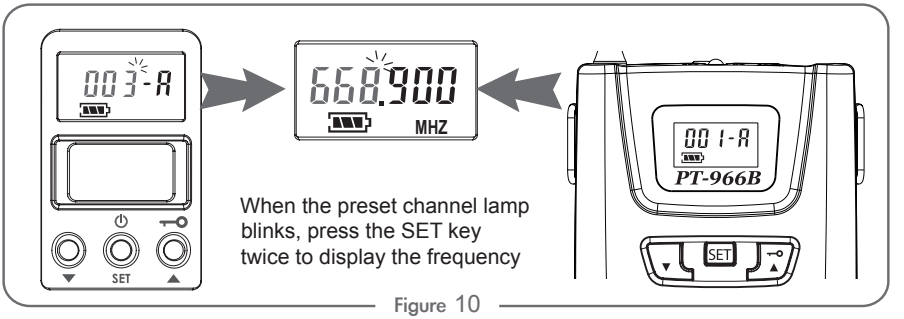

Figure 10

3. Using preset channels:

When using preset channels, make settings as 3-1 and 3-2.

3-1 When a channel is displayed on LCD

(1) Press down the SET key ㉘ for 2 seconds.

(2) With the 3 digits on the left of the LCD blinking, press ▲, ▼ keys to change the preset channel (keeping the ▲, ▼ keys pressed down makes the channel change faster). Press SET key to set, and the letter A or B on the right of the LCD blinks; press ▲ to display b to select Channel B on the receiver; or, press ▼ display A to select Channel A on the receiver. After the selection is made, press SET key to save the set value (Fig.11).

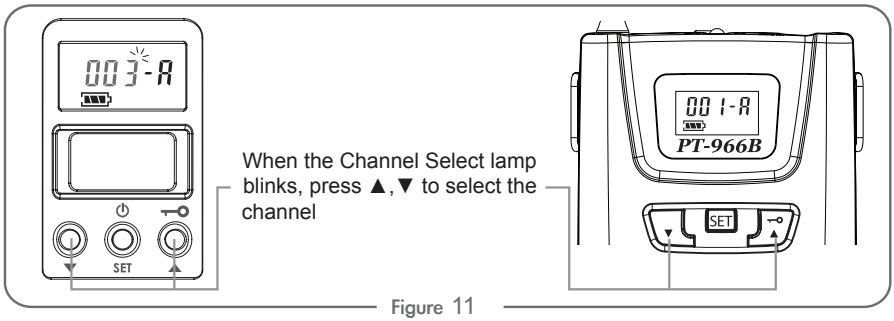

Figure 11

3-2 When using a preset channel while the frequency is displayed on screen:

(1) Press down the SET key ㉘ for 2 seconds.

(2) The 3 digits on the left of the LCD begin to blink; press SET key twice to display the channel on LCD (Fig.11), now adjust the channel by the same step of "3-1 When a channel is displayed on LCD – Point (2)".

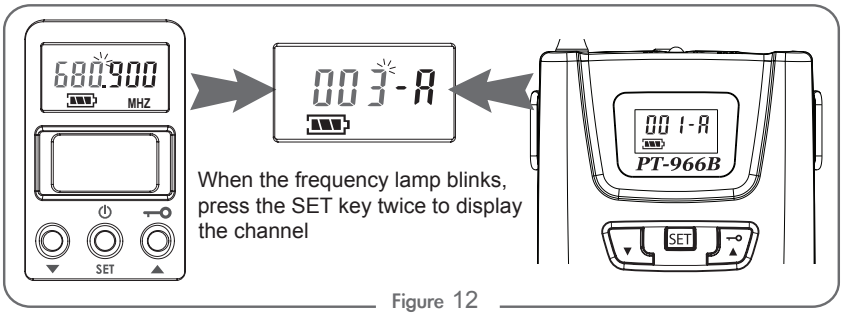

Figure 12

4. Adjusting microphone sensitivity

(1) Press down the SET key ㉘ for 2 seconds.

(2) The 3 digits on the left of the LCD begin to blink; press SET key four times to enter the sensitivity adjustment screen. (Fig.12)

(3) press ▲ 、▼ keys to adjust the microphone sensitivity in the range of -9-+12dB at an increment of 3dB. After the adjustment, press SET key to save the setting.

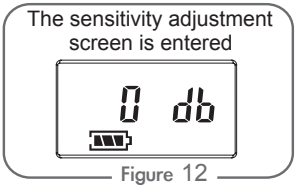

Figure 12

5. Adjusting transmission power

(1) Press down the SET key ㉘ for 2 seconds.

(2) The 3 digits of frequency or channel on the left of the LCD begin to blink; press SET key five times to display rF Lo (or rF Hi) on LCD. Press ▲ to display rF Hi to set as high transmission power; or press ▼ to display rF Lo to set as low transmission power. Press SET key to save the setting. (Fig.13)

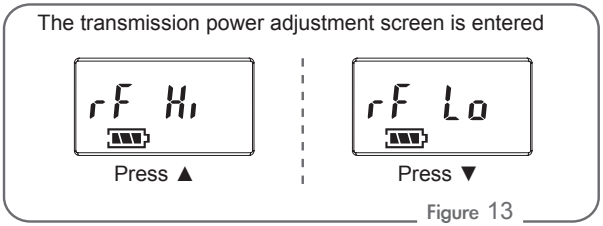

Figure 13

6. Setting key lock:

In a mode other than Setting mode, keep pressing down ▲ key for 2 seconds; when the screen displays Loc On, the handheld panel key functions are locked. To unlock, press down ▼ key for more than 2 seconds to display Loc OFF on screen, and the key lock is released. (Fig.14)

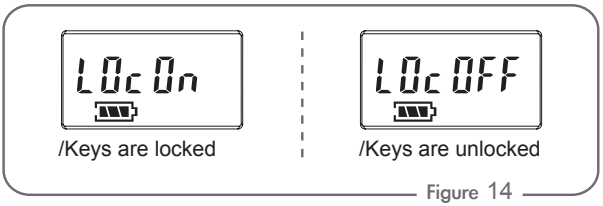

Figure 14

7. Recommendation

(1) In order to achieve the optimum reception condition and also extend the operating distance, please leave a "open space" between the receiver and transmitter.
(2) Keep the devices away from the metal objects or any interference sources, at least 50 cm.
(3) To avoid the feed-back effect, don't leave the mic. to aim at the speakers directly.
(4) For best pick-up pattern, please hold the middle of the mic. body.
(5) Remove batteries from the battery compartment when the transmitter will not be used for a long time.
(6)When you need to replace the batteries, please replace both batteries at the same time with new ones.

8. Important Notice

(1) JTS offers wireless systems in a selection of bands that conform to the different government regulations of specific nations or geographic regions. These regulations help limit radio frequency (RF) interference among different wireless devices and prevent interference with local public communications channels, such as television and emergency broadcasts.

(2) For information on bands available in your area, consult your local dealer or phone JTS. More information is also available at JTS's website (www.jts.com.tw).

(3) This Radio apparatus may be capable of operating on some frequencies not authorized in your region. Please contact your national authority to obtain information on authorized frequencies and RF power levels for wireless microphone products.