JTS®

WIRELESS **TOUR GUIDE** SYSTEM

Specification *TG-64CH36*

TG-64CH18

TG-64CH36

Number of charging slot : 36 (receiver or transmitter)
Power requirement : Input : AC 100~240 V, 2.8A max
Output : DC 12V, 16A
LED Indicator : Power Connected: Flash Green
Charging: Green
Full Charged: Turn off
Charging time : 8 Hours
Dimensions(mm) : 561mm(W)*399.77mm(D)*230mm(H)

TG-64CH18

Number of charging slot : 18 (receiver or transmitter)
Power requirement : Input : AC 100~240 V, 1.6A max
Output : DC 12V, 7A
LED Indicator : Power Connected: Flash Green
Charging: Green
Full Charged: Turn off
Charging time : 8 Hours
Dimensions(mm) : 361.4mm(W)*422mm(D)*189mm(H)

Important Caution

- Always make all connections before plugging the unit into an AC power outlet.
- Do not leave the devices in a place with high temperature or high humidity.
- Always do not handle the power cord with wet hands !
- Keep the devices away from fire and heat sources.
- Please fully charge the battery over 8 hours before operation, and recharge if no use for over three months.
- Do not close the cover during charging to avoid overheating.

Feature

- TG-64CH36/TG-64CH18, the 36-slot charger/18-slot charger, is designed to charge multi-units (TG-64T / TG-64TA or TG-64R / TG-64RA) simultaneously.
- Light-weight and cabin baggage size design provides great convenience during trips.
- The charger is designed with 3 kinds of protection circuit: over-charging, over-discharging, and short circuit. It takes approximately 8 hours to fully charge batteries.

JTS® PROFESSIONAL CO., LTD.
No. 148, 9th Industry Road, Ta-Li Industrial Park,
Taichung City, Taiwan, R.O.C.
Tel: 886-4-24938803 Fax: 886-4-24914890
E-mail: jts@jts.com.tw
www.jts.com.tw

59516-005-04

Parts Identification

TG-64CH36/TG-64CH18

1. Power Switch and Indicator
2. DC input
3. Adaptor
4. Charger Slot
5. Charging Indicator

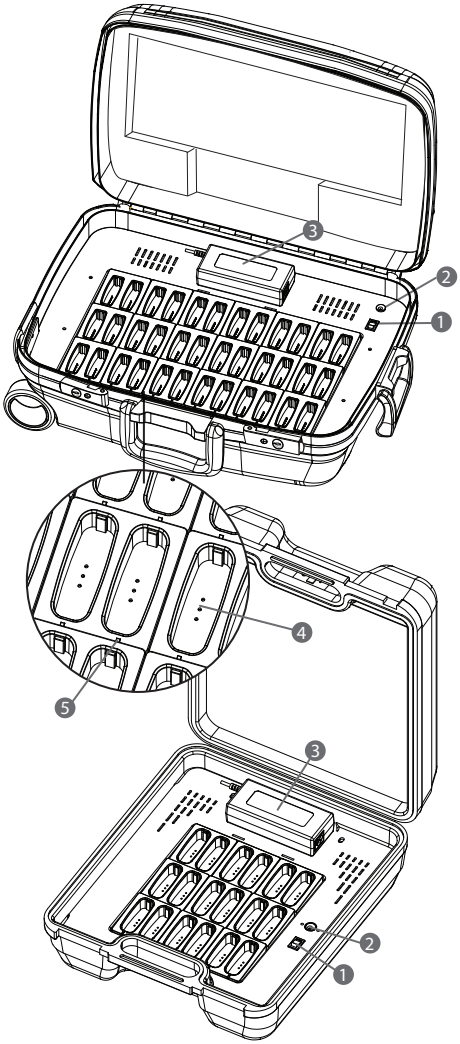

Installation and Operation

A. Connect AC output to outlet and DC output plug into "DC input". As soon as AC power is connected, and "Power Switch" is turned on, the "Charging Indicator" will flash.

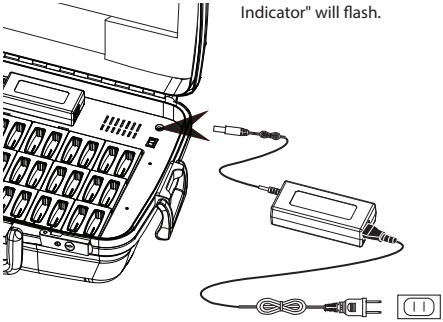

B. Plug the TG-64T(TA)/TG-64R(RA) into "Charger Slot" of TG-64CH36/TG-64CH18. The "Charging Indicator" will flash for seconds at beginning for initial testing, and then shows green light when charging. It will turn off when the battery is fully charged.

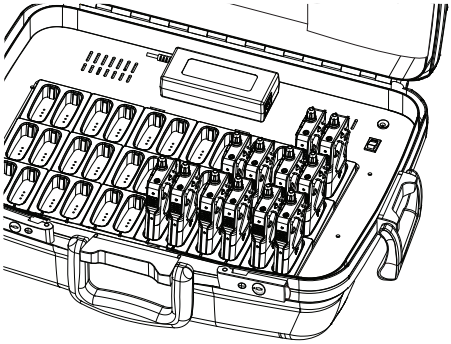

Attention

- ✻ The "Charging Indicator" may turn flashing for self-testing during charging to protect batteries from being damaged.
- ✻ To avoid overheating, don't close the cover during charging.
- ✻ To avoid being damaged, don't drop the charging case.