JTS PROFESSIONAL CO., LTD.

JSS-20 CH-2/CH-8

2/8-Slot Charger

CHARGER For

JSS-20 & UF-20TB & JSS-4A & JSS-4B
R-4TBM & RU-G3TB

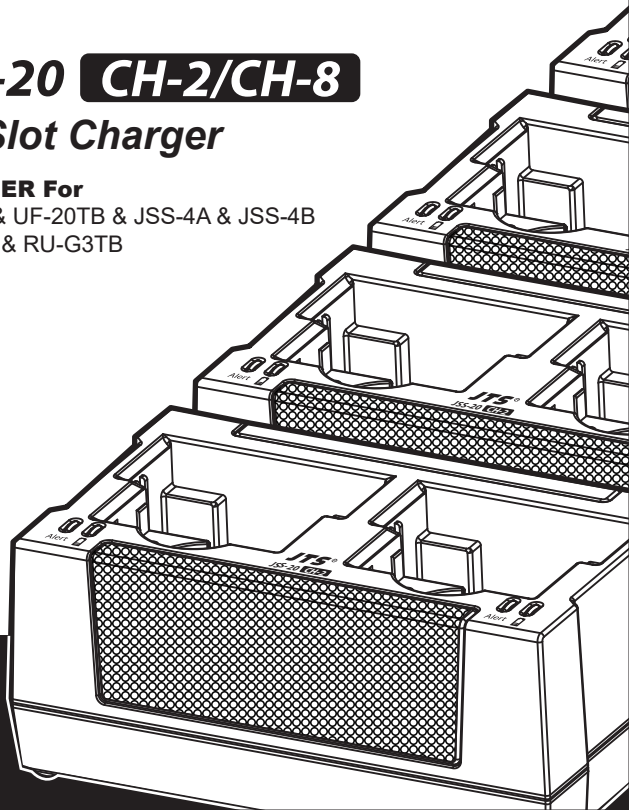

JTS PROFESSIONAL CO., LTD.

JTS® PROFESSIONAL CO., LTD.
No. 148, 9th Industry Road, Ta-Li Industrial Park,
Taichung City 41280, Taiwan.
Tel: 886-4-24938803 Fax: 886-4-24914890
E-mail: jts@jts.com.tw
www.jts.com.tw

Made in Taiwan

59516-100-04

1. Parts Identification

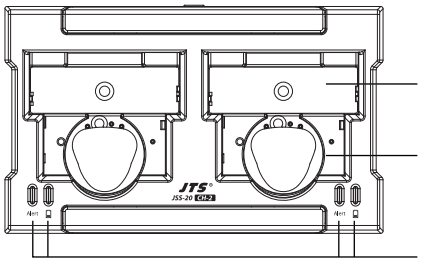

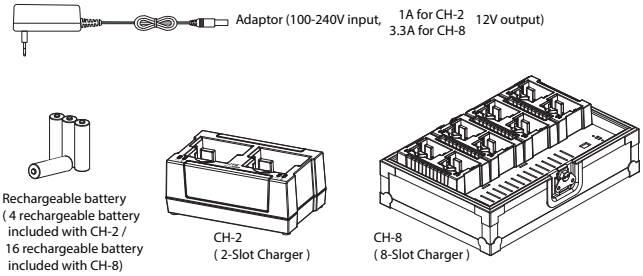

2. Specification

CH-2 (2-Slot Charger)
Input: AC 100~240V, 0.4A max
Output: DC 12V, 1A

LED Indicator
Full Charged / Standby: Green
Charging: Flash Green
Fault: Flash Red

Charging Time: 3 hours
(2000mAh rechargeable battery)

CH-8 (8-Slot Charger)
Input: AC 100~240V, 1.2A max
Output: DC 15V, 3A

LED Indicator
Full Charged / Standby: Green
Charging: Flash Green
Fault: Flash Red

Charging Time: 3 hours
(2000mAh rechargeable battery)

3. Charge Battery

Plug the UF-20TB / JSS-20 into "Charger Slot" CH-2 or CH-8.
The charging indicator will flash green light when it is charging, and the green light will stop flashing when it is fully charged.
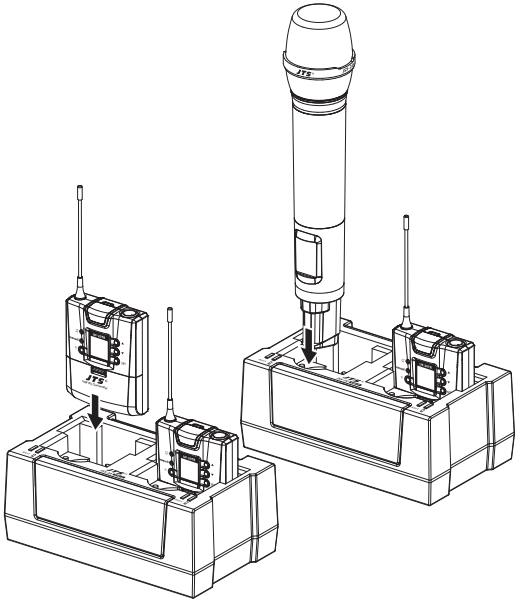
Noted 1: As soon as AC power is connected, the charging indicator will show green light.
Noted 2: Please follow the direction as show in below demonstration picture.
Noted 3: One charger Slot can only charge one item at a time.